Acute®
PC-based T&M Instruments

CALTRON PTE LTD

皇晶科技股份有限公司
Acute Technology Inc.

MIPI60-pin Adapter

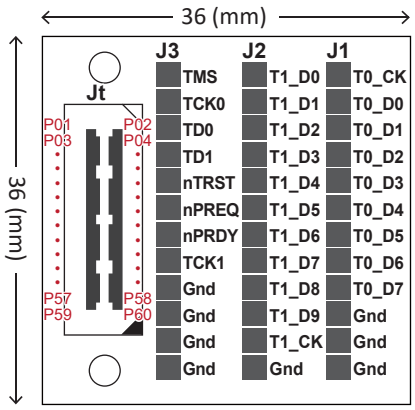

Top

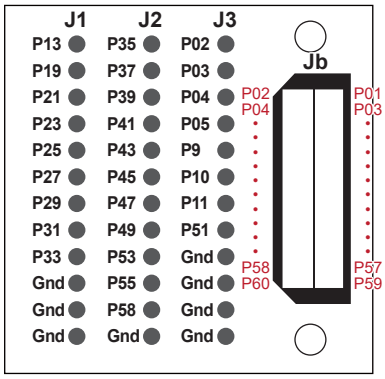

Bottom

The MIPI60-pin Adapter with extended 2.54 pin header test point which supports JTAG debug, SWD and Intel CPU debug.

Item number : AC035

Technical data

Connector : SamTec Q-strip QSH-030-01-L-D-A

Jt: QSH-030-01-L-D-A @top side

Jb: QTH-030-01-L-D-A @bottom side

© 2023 All rights reserved. Acute Technology Inc. Acute and Acute logo is a registered trademark of Acute Technology Inc.
| service@acute.com.tw | Tel:886-2-2999-3275 | **www.acute.com.tw**